EDGE 540

SEAGULL MODEL

ASSEMBLY MANUAL

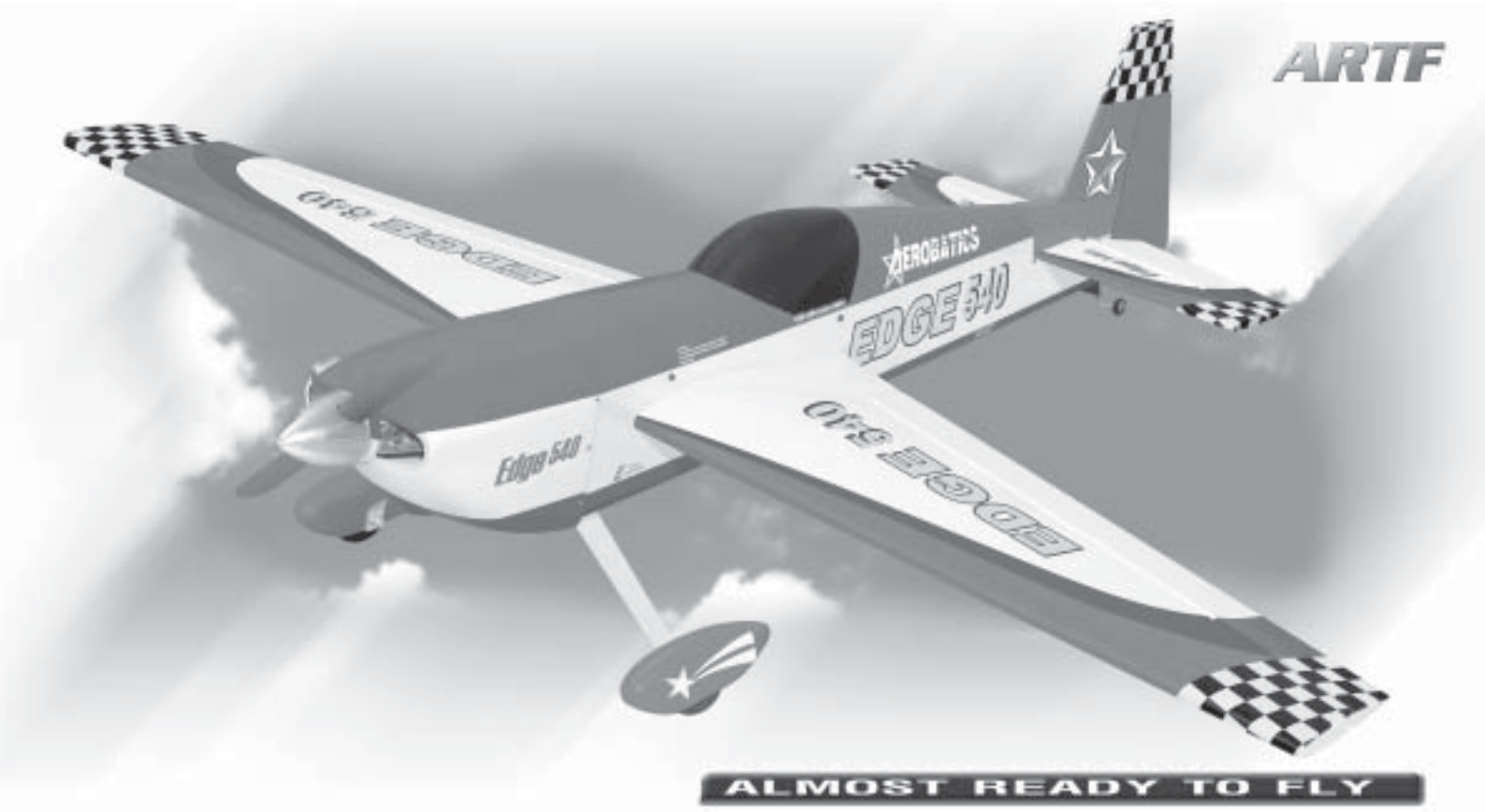

Specifications

Wingspan---------- 77.5 in---------- 197cm.
Wing area---------- 1023sq.in---------- 66 sq.dm.
Approximate flying weight---------- 10.6-13lbs---------- 4.8-5.8kg.
Length---------- 71 in---------- 179cm.
Recommended engine size---------- 1.20-1.60 cu.in---------- 2-stroke.
1.80 cu.in---------- 4-stroke.
Radio System required 6 channel with 8 digital servos - 6.5kg/cm.
Flying skill level Intermediate/advanced.

Kit features.

- Ready-made—minimal assembly & finishing required.
- Ready-covered covering.
- Photo-illustrated step-by-step Assembly Manual.

Made in Vietnam.

FACTORY BUILT MODEL

INTRODUCTION.

Thank you for choosing the **EDGE 540** ARTF by SEAGULL MODELS. The **EDGE 540** was designed with the intermediate/advanced sport flyer in mind. It is a semi scale airplane which is easy to fly and quick to assemble. The airframe is conventionally built using balsa, plywood to make it stronger than the average ARTF , yet the design allows the aeroplane to be kept light. You will find that most of the work has been done for you already.Flying the **EDGE 540** is simply a joy.

This instruction manual is designed to help you build a great flying aeroplane. Please read this manual thoroughly before starting assembly of your **EDGE 540**. Use the parts listing below to identify all parts.

WARNING.

Please be aware that this aeroplane is not a toy and if assembled or used incorrectly it is capable of causing injury to people or property. WHEN YOU FLY THIS AEROPLANE YOU ASSUME ALL RISK & RESPONSIBILITY.

If you are inexperienced with basic R/C flight we strongly recommend you contact your R/C supplier and join your local R/C Model Flying Club. R/C Model Flying Clubs offer a variety of training procedures designed to help the new pilot on his way to successful R/C flight. They will also be able to advise on any insurance and safety regulations that may apply.

ADDITIONAL ITEMS REQUIRED.

- ☐ 1.20-1.60 2-stroke engine.
  1.80 4-stroke engine.
- ☐ Computer radio with eight digital servos - 6.5kg/cm.
- ☐ Glow plug to suit engine.
- ☐ Propeller to suit engine.
- ☐ Protective foam rubber for radio system.
- ☐ Silicone fuel line.

TOOLS & SUPPLIES NEEDED.

- ☐ Thick cyanoacrylate glue.
- ☐ 30 minute epoxy.
- ☐ 5 minute epoxy.
- ☐ Hand or electric drill.
- ☐ Assorted drill bits.
- ☐ Modelling knife.
- ☐ Straight edge ruler.
- ☐ 2mm ball driver.
- ☐ Phillips head screwdriver.
- ☐ 220 grit sandpaper.
- ☐ 90° square or builder's triangle.
- ☐ Wire cutters.
- ☐ Masking tape & T-pins.
- ☐ Thread-lock.
- ☐ Paper towels.

PARTS LISTING.

FUSELAGE ASSEMBLY

- ☐ (1) Fuselage.
- ☐ (1) Canopy hatch.

WING ASSEMBLY

- ☐ (1) Right wing half / aileron.
- ☐ (1) Left wing half / aileron.
- ☐ (2) Aluminium dihedral brace.

Tail section assembly

- ☐ (2) Horizontal stabilizer / elevator halves.
- ☐ (1) Rudder halves

Some more parts.

HARDWARE PACK

COWLING
Landing gear.....

NOTE: To avoid scratching your new aeroplane we suggest that you cover your workbench with an old towel. Keep a couple of jars or bowls handy to hold the small parts after you open the bags.

Please trial fit all parts. Make sure you have the correct parts and that they fit and are aligned properly before gluing! This will ensure proper assembly as the **EDGE 540** is made from natural materials and minor adjustments may have to be made.

The paint and plastic parts used in this kit are fuel proof. However, they are not tolerant of many harsh chemicals including the following: paint thinner, cyano-acrylate glue accelerator, cyanoacrylate glue de-bonder and acetone. Do not let these chemicals come in contact with the colours on the covering and the plastic parts.

HINGING THE AILERONS.

Note: *The control surfaces, including the ailerons, elevators, and rudder, are prehinged with hinges installed, but the hinges are not glued in place. It is imperative that you properly adhere the hinges in place per the steps that follow using a high-quality thin C/A glue.*

☐ 1) Carefully remove the aileron from one of the wing panels. Note the position of the hinges.

☐ 2) Remove each hinge from the wing panel and aileron and place a T-pin in the center of each hinge. Slide each hinge into the aileron until the T-pin is snug against the aileron. This will help ensure an equal amount of hinge is on either side of the hinge line when the aileron is mounted to the wing panel.

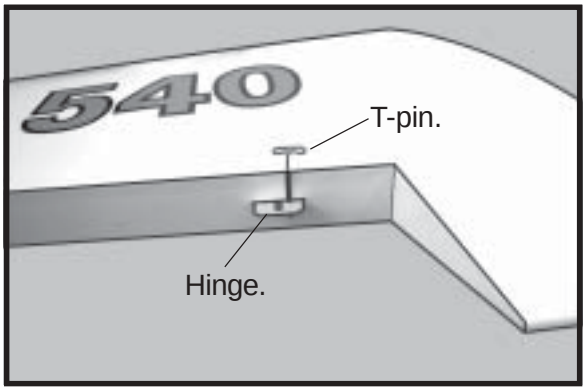

☐ 3) Slide the aileron on the wing panel until there is only a slight gap. The hinge is now centered on the wing panel and aileron. Remove the T-pins and snug the aileron against the wing panel. A gap of 1/64” or less should be maintained between the wing panel and aileron.

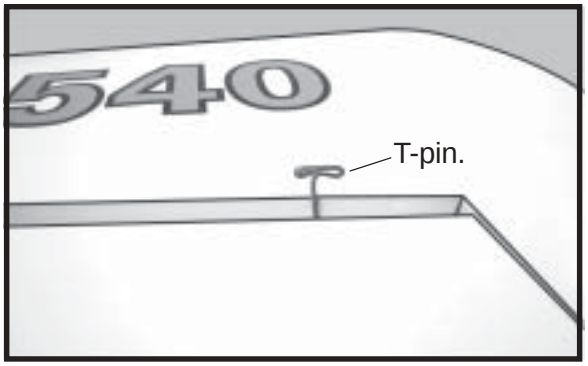

☐ 4)Deflect the aileron and completely saturate each hinge with thin C/A glue. The ailerons front surface should lightly contact the wing during this procedure. Ideally, when the hinges are glued in place, a 1/64” gap or less will be maintained throughout the lengh of the aileron to the wing panel hinge line.

Note: *The hinge is constructed of a special material that allows the C/A to wick or penetrate and distribute throughout the hinge, securely bonding it to the wood structure of the wing panel and aileron.*

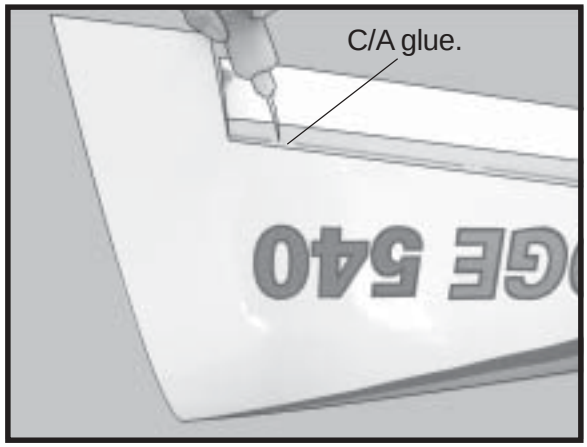

☐ 5) Turn the wing panel over and deflect the aileron in the opposite direction from the opposite side. Apply thin C/A glue to each hinge, making sure that the C/A penetrates into both the aileron and wing panel.

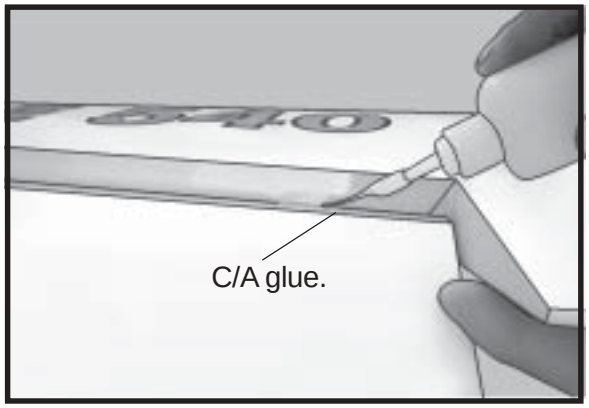

☐ 6) Using C/A remover/debonder and a paper towel, remove any excess C/A glue that may have accumulated on the wing or in the aileron hinge area.

☐ 7) Repeat this process with the other wing panel, securely hinging the aileron in place.

☐ 8) After both ailerons are securely hinged, firmly grasp the wing panel and aileron to make sure the hinges are securely glued and cannot be pulled out. Do this by carefully applying medium pressure, trying to separate the aileron from the wing panel. Use caution not to crush the wing structure.

Note: *Work the aileron up and down several times to "work in" the hinges and check for proper movement.*

HINGING THE ELEVATORS.

Glue the elevator hinges in place using the same tectniques used to hinge the ailerons.

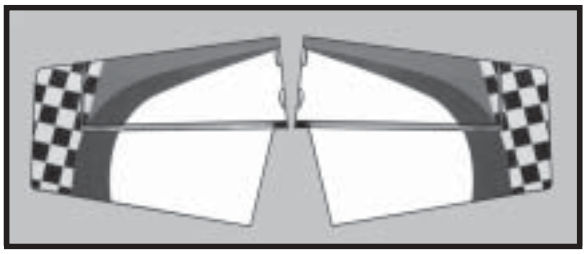

HINGING THE RUDDER.

Glue the rudder hinges in place using the same tectniques used to hinge the ailerons.

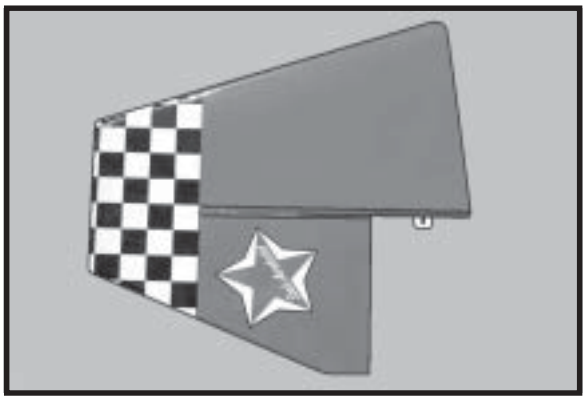

INSTALLING THE AILERON SERVOS.

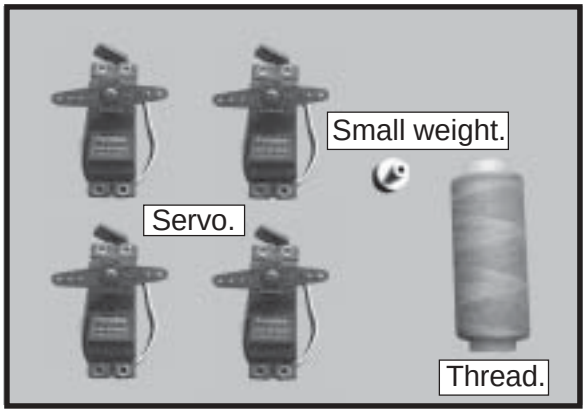

We recommended to use long servos arm for all servos without throttle servo.

⚠ *Install the rubber grommets and brass collets onto the aileron servo. Test fit the servo into the aileron servo mount.*

⚠ *Because the size of servos differ, you may need to adjust the size of the precut opening in the mount. The notch in the sides of the mount allow the servo lead to pass through.*

Using a small weight (*Weighted fuel pick-up works well*) and thread, feed the string through the wing as indicated.

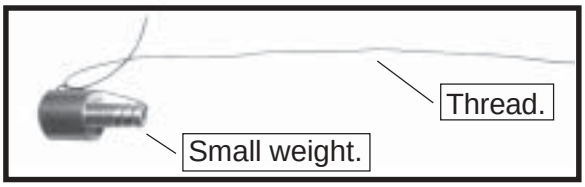

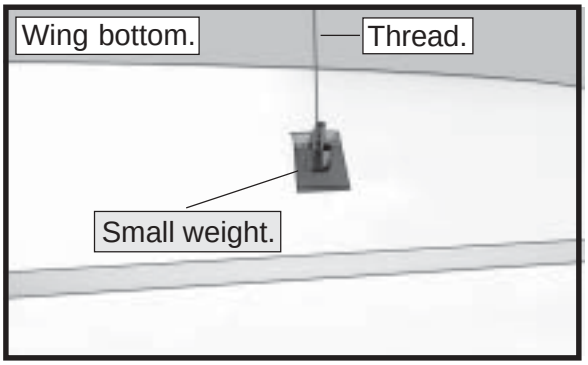

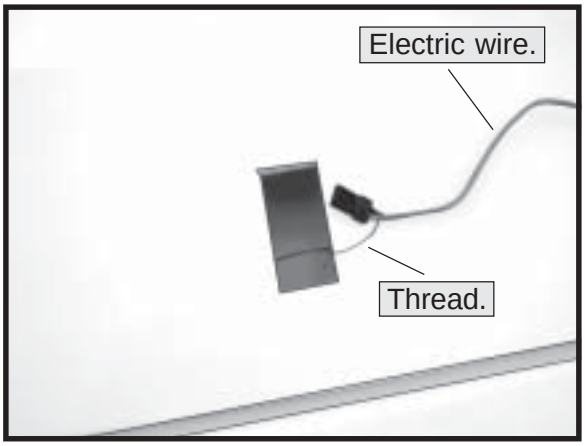

Attach the thread to the servo lead and carefully thread it though the wing. Once you have thread the lead throught the wing, remove the string so it can use for the other servo lead. Tape the servo lead to the wing to prevent it from falling back into the wing.

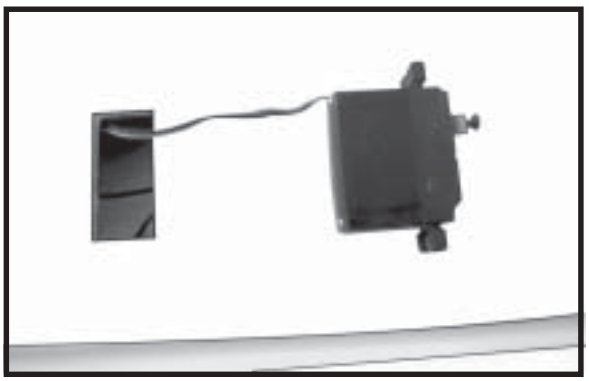

Secure the servos with the screws provided with your radio system.

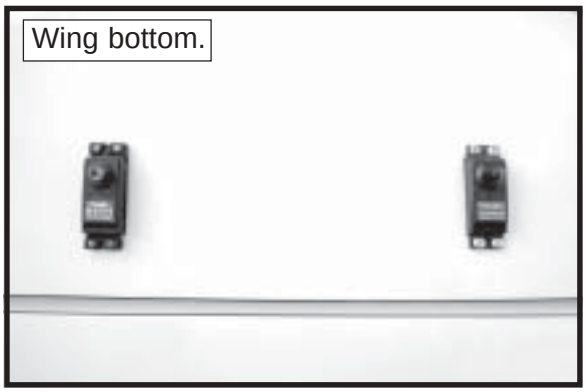

Repeat the procedure for the other wing half.

ENGINE MOUNT.

See pictures below:

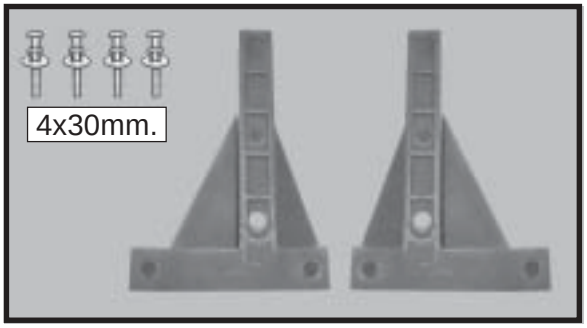

Mark and drill 4 holes for engine mount.

FUEL TANK.

INSTALLING THE STOPPER ASSEMBLY.

☐ 1) Using a modeling knife, carefully cut off the rear portion of one of the 3 nylon tubes leaving 1/2" protruding from the rear of the stopper. This will be the fuel pick up tube.

☐ 2) Using a modeling knife, cut one length of silicon fuel line. Connect one end of the line to the weighted fuel pick up and the other end to the nylon pick up tube.

☐ 3) Carefully bend the second nylon tube up at a 45º angle. This tube is the vent tube.

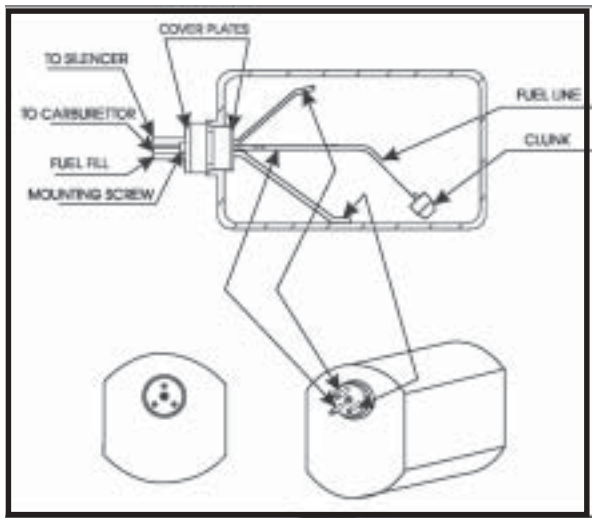

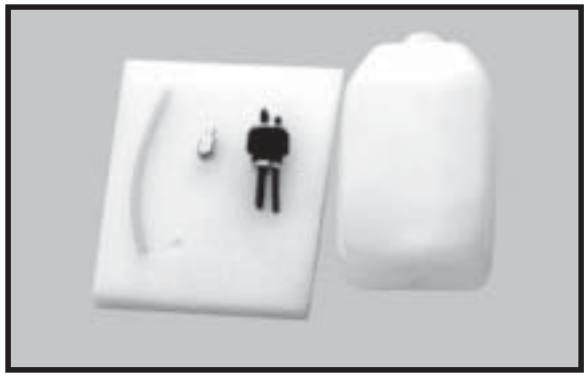

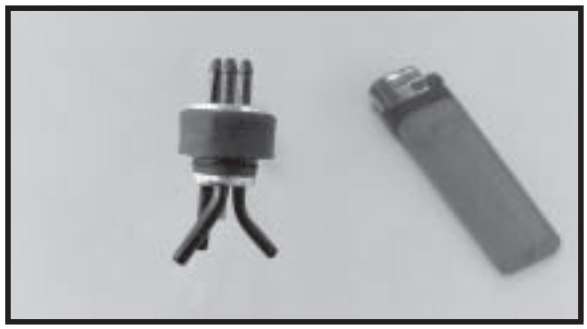

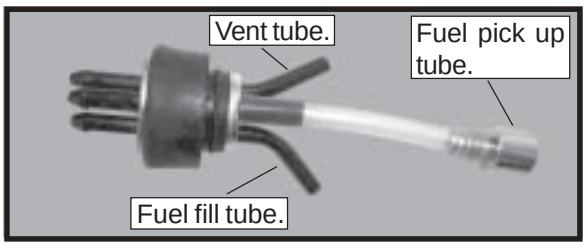

Carefully use a lighter or heat gun to permenently set the angle of the vent tube.

Important: *When the stopper assembly is installed in the tank, the top of the vent tube should rest just below the top surface of the tank. It should not touch the top of the tank.*

☐ 4) Test fit the stopper assembly into the tank. It may be necessary to remove some of the flashing around the tank opening using a modeling knife. If flashing is present, make sure none falls into the tank.

☐ 5) With the stopper assembly in place, the weighted pick up should rest away from the rear of the tank and move freely inside the tank. The top of the vent tube should rest just below the top of the tank. It should not touch the top of the tank.

☐ 6) When satisfied with the alignment of the stopper assembly tighten the 3 x 20mm machine screw until the rubber stopper expands and seals the tank opening. Do not overtighten the assembly as this could cause the tank to split.

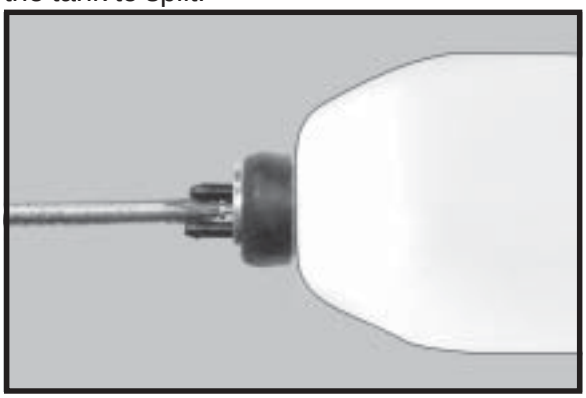

Attach the silicone fuel and pressure pipes to the tank. The lower pipe is the 'feed' and the upper two the 'pressure and fill'. The fill pipe is the next pipe.

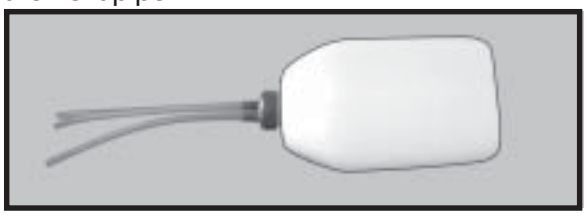

You should mark which tube is the vent and which is the fuel pick up when you attach fuel tubing to the tubes in the stopper. Once the tank is installed inside the fuselage, it may be difficult to determine which is which.

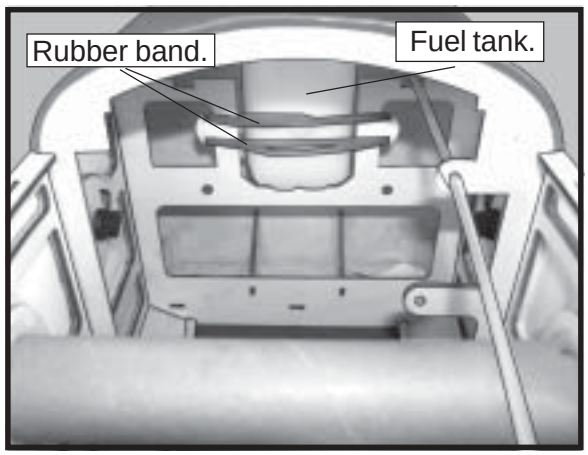

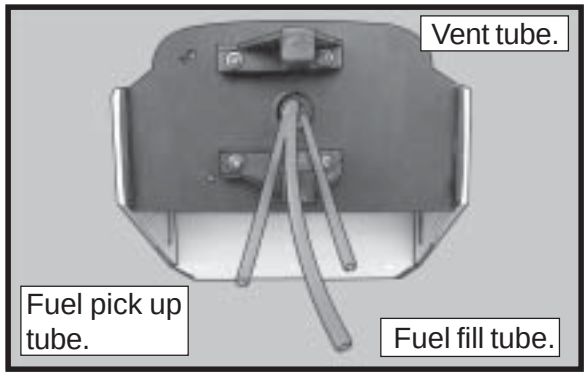

Blow through one of the lines to ensure the fuel lines have not become kinked inside the fuel tank compartment. Air should flow through easily.

WHEEL AND WHEEL PANTS.

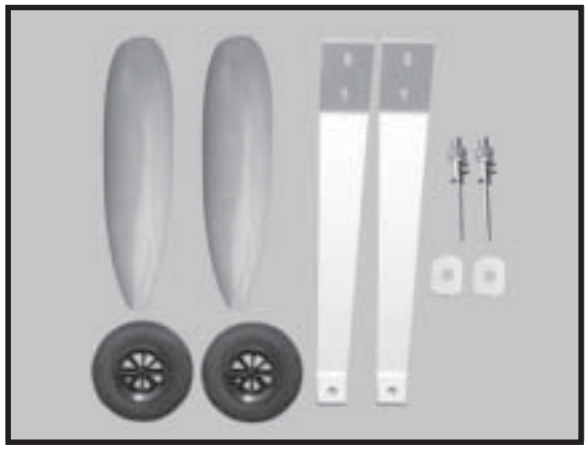

☐ 1) Assembling and mounting the wheel pants as shown below pictures.

☐ 2) Follow diagram below for wheel pant installation:

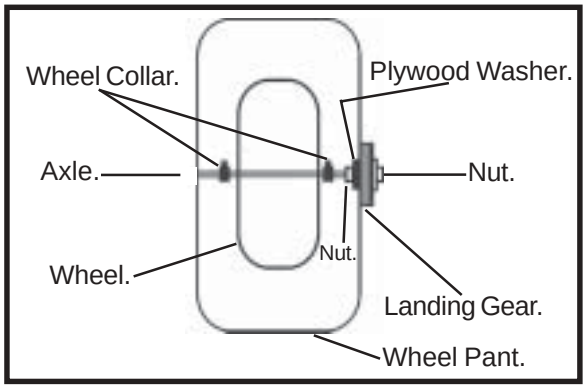

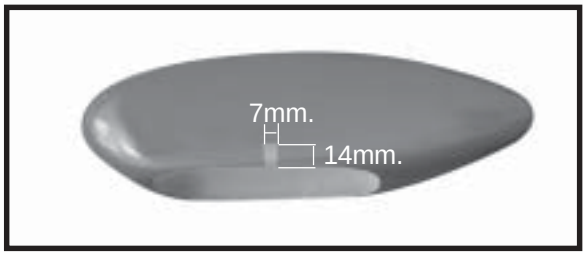

☐ 3) You have to trim each axles and using a tool cutting and cut-off wheel.

Caution when cutting the axles and wear protective goggles.

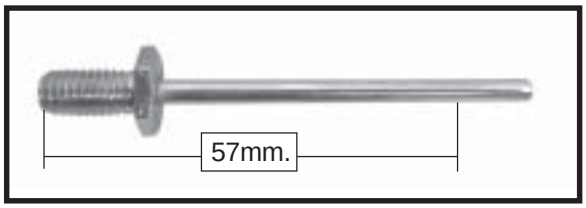

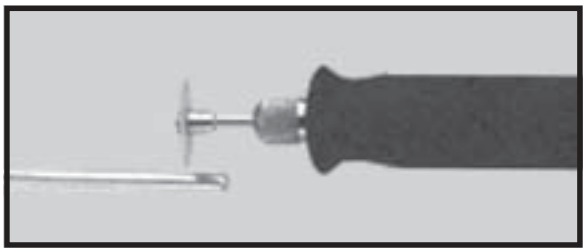

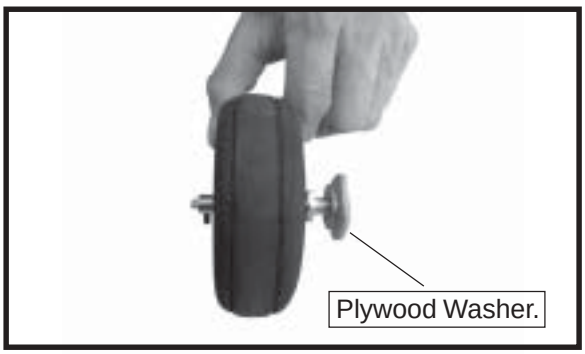

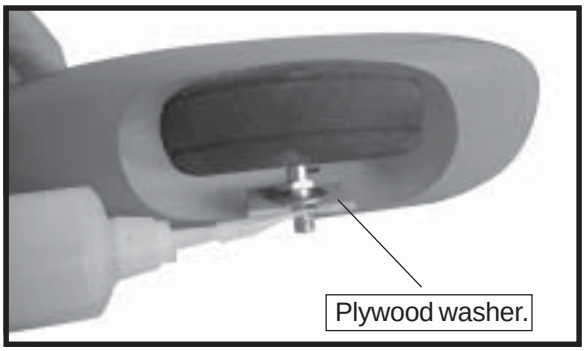

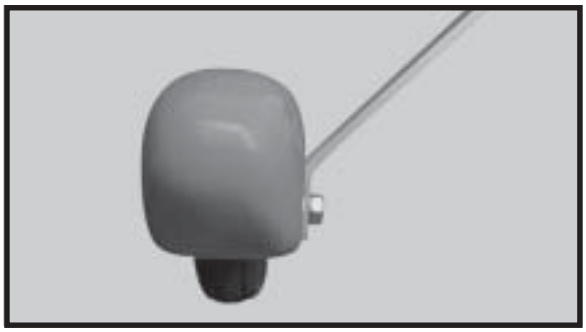

☐ 4) A drop of C/A glue on the wheel collar screws will help keep them from coming lose during operation.

Repeat the process for the other wheel.

INSTALLING THE MAIN LANDING GEAR.

☐1) The blind nuts for securing the landing gear are already mounted inside the fuselage.

☐2) Using the hardware provided, mount the main landing gear to the fuselage.

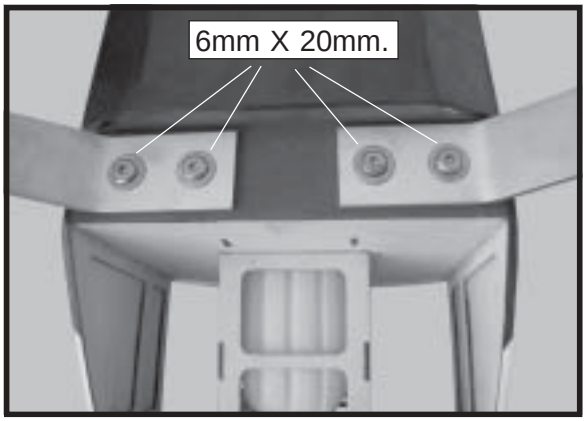

INSTALLING THE FUSELAGE SERVO.

Engine 2 stroke.

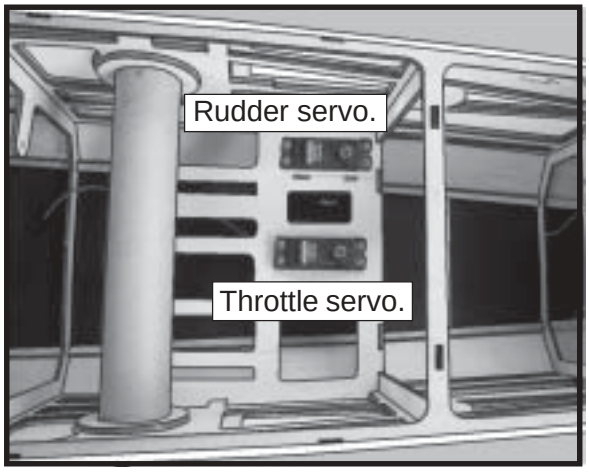

Engine 4 stroke.

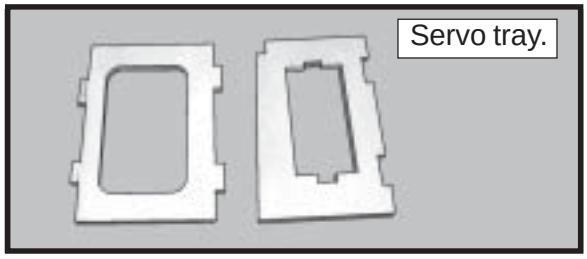

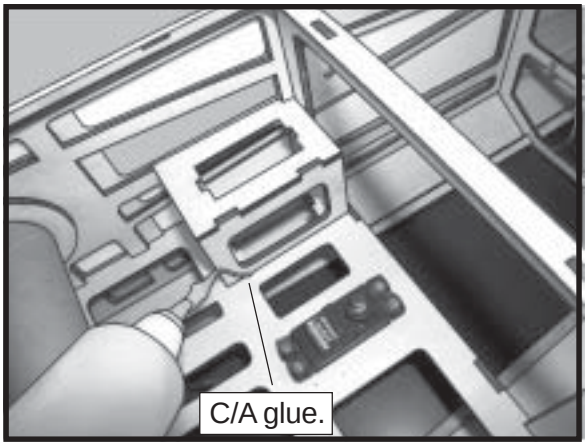

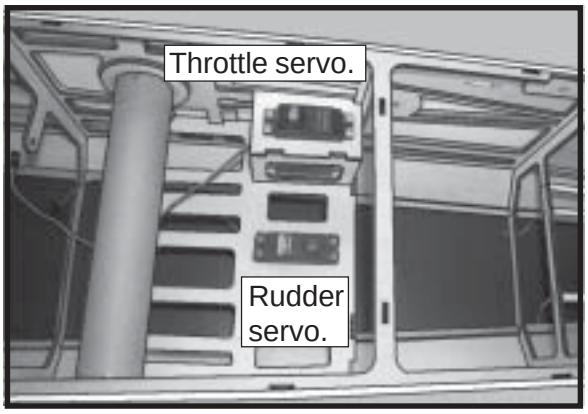

ELEVATOR SERVO INSTALLATION.

☐ 1) Locate and cut out the covering film from the servo holes in both sides of fuselage.

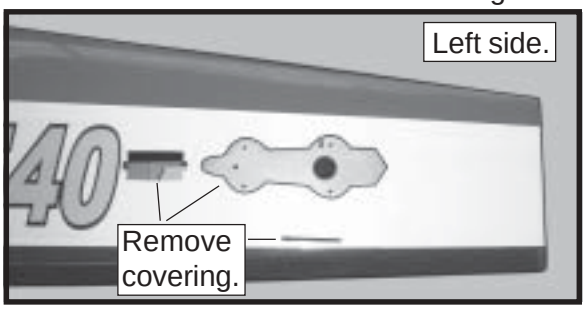

☐ 2) Install the rubber grommets and brass collets onto the elevator servo. Test fit the servo into the elevator servo mount.

⚠ *Because the size of servos differ, you may need to adjust the size of the precut opening in the mount. The notch in the sides of the mount allow the servo lead to pass through.*

☐ 3) Secure the servos with the screws provided with your radio system.

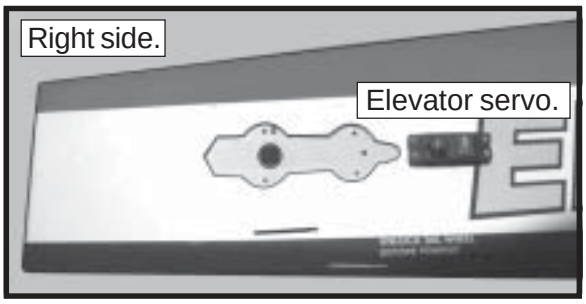

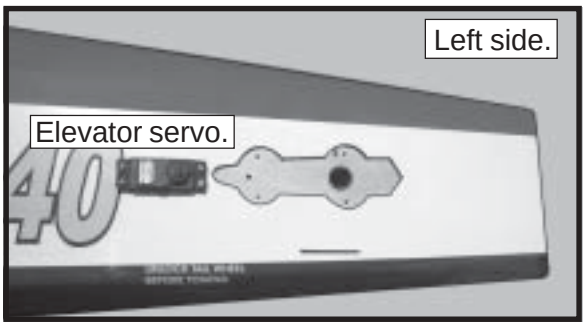

MOUNTING THE ENGINE.

☐ 1) Install the pushrod housing through the predrilled hole in the firewall and into the servo compartment. The pushrod housing should protrude 1/4" out past the front of the firewall.

Make a Z-Bend 1/4" from one end of the plain wire pushrod.

☐ 2) Place your engine onto the engine mount. Adjust the engine is centered of the edges of the engine case.

☐ 3) When you are satisfied with the alignment, mark the locations of the engine mounting.

☐ 4) Remove the engine. Using an drill bit, drill the mounting holes through the engine mount at the four locations marked.

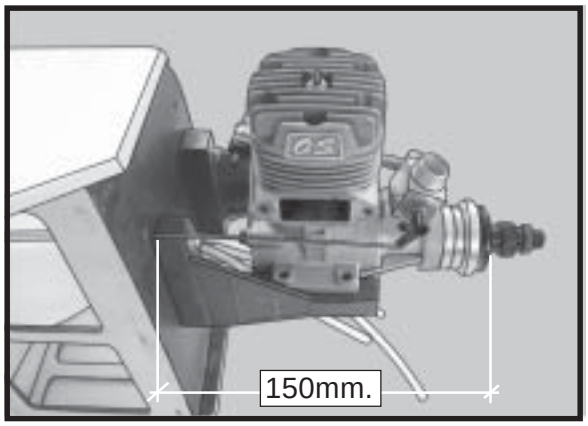

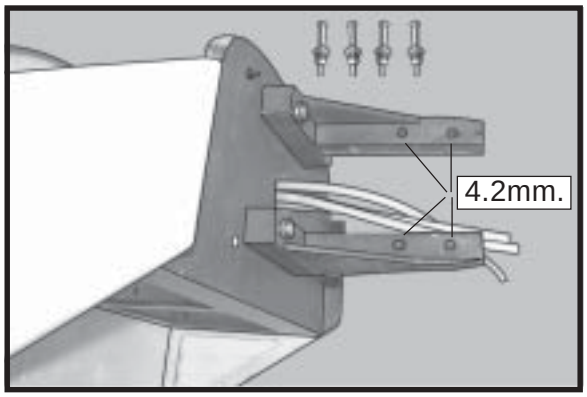

☐ 5) Bolt the engine to the engine mount using the four machine screws. Double check that all the screws are tight before proceeding.

☐ 6) Attach the Z-Bend in the pushrod wire to the throttle arm on the carburetor. You will need to remove the throttle arm from the car- buretor to be able to attach the Z-bend. When complete, re-attach the throttle arm to the carburetor.

Engine 2 stroke.

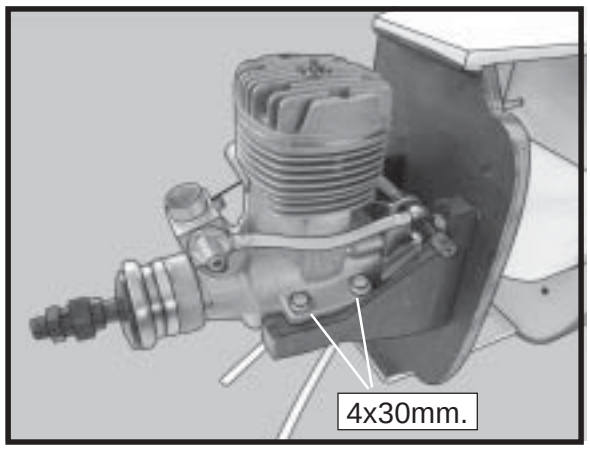

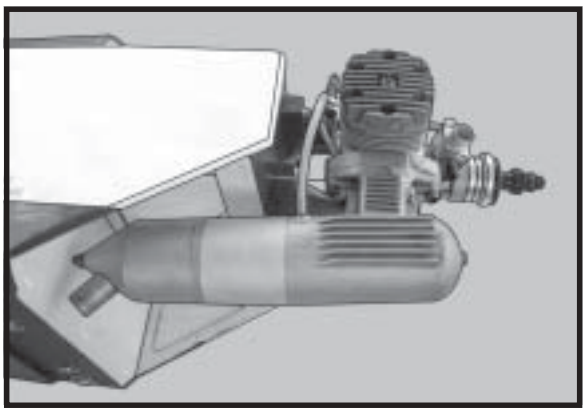

Engine 4 stroke.

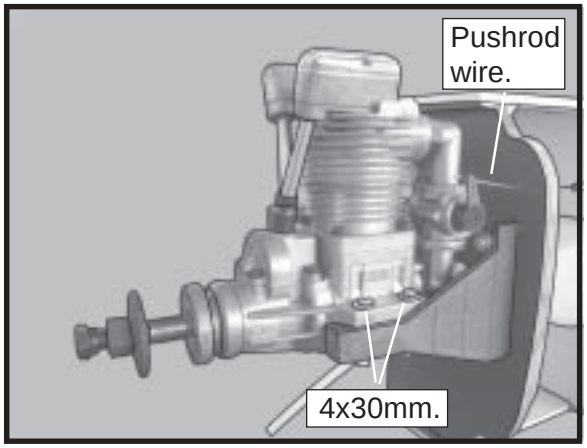

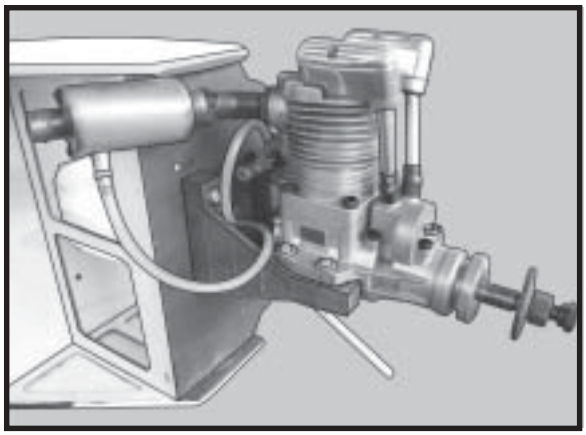

COWLING.

☐ 1) Slide the fiberglass cowl over the engine and line up the back edge of the cowl with the marks you made on the fuselage then trim and cut.

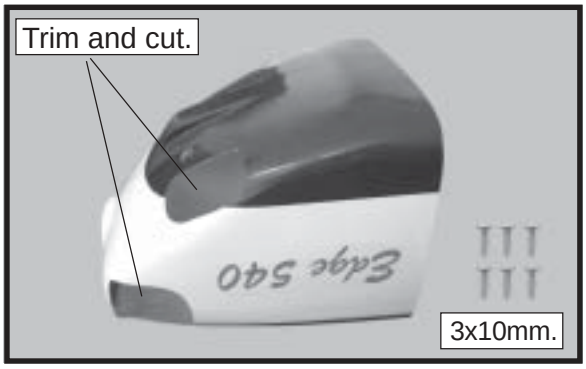

☐ 2) While keeping the back edge of the cowl flush with the marks, align the front of the cowl with the crankshaft of the engine. The front of the cowl should be positioned so the crankshaft is in **nearly** the middle of the cowl opening. Use the spinner backplate as a guide. Hold the cowl firmly in place using pieces of masking tape.

⚠ *Because of the diameter of the cowl, it may be necessary to use a needle valve extension for the high speed needle valve. Make this out of sufficient length 1.5mm wire and install it into the end of the needle valve. Secure the wire in place by tightening the set screw in the side of the needle valve.*

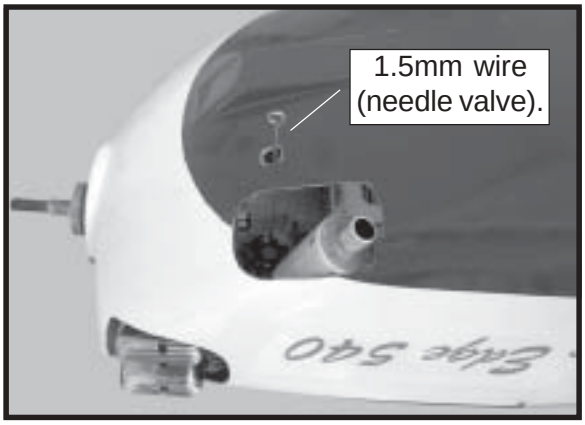

☐ 3) Slide the cowl back over the engine and secure it in place using six 3 x 10mm wood screws. See picture below.

☐ 4) Install the muffler and muffler extension onto the engine and make the cutout in the cowl for muffler clearance. Connect the fuel and pressure lines to the carburetor, muffler and fuel filler valve.

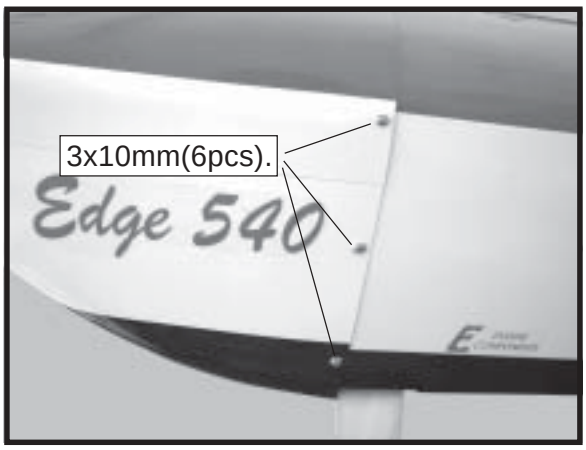

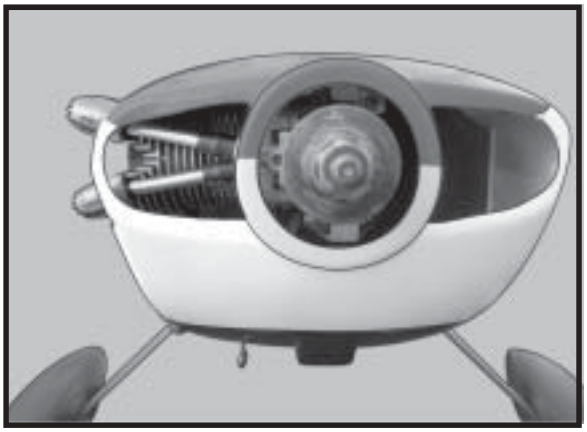

INSTALLING THE SPINNER.

☐ 1) Install the spinner backplate, propeller and spinner cone. The spinner cone is held in place using two 3 x 10mm wood screws. (spinner is not included).

⚠ *The propeller should not touch any part of the spinner cone. If it does, use a sharp modeling knife and carefully trim away the spinner cone where the propeller comes in contact with it.*

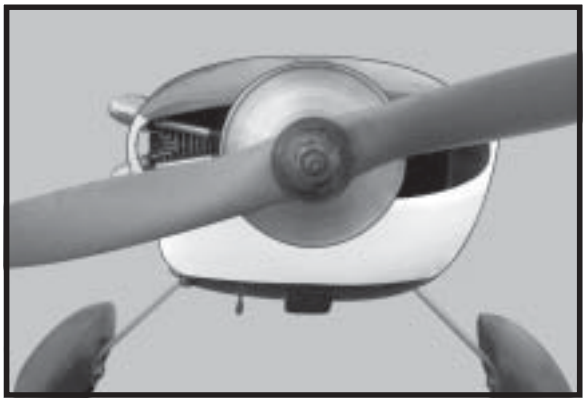

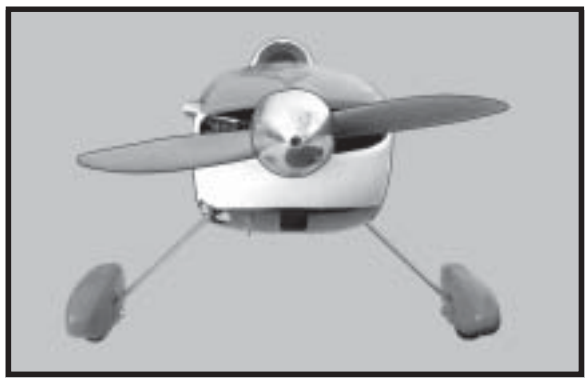

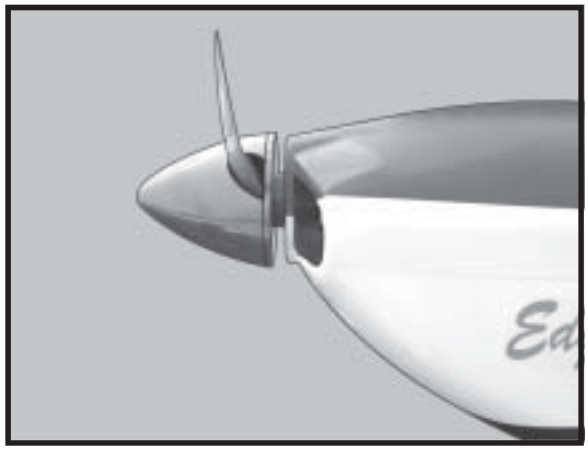

INSTALLING THE SWITCH.

Install the switch into the precut hole in the side of the fuselage.

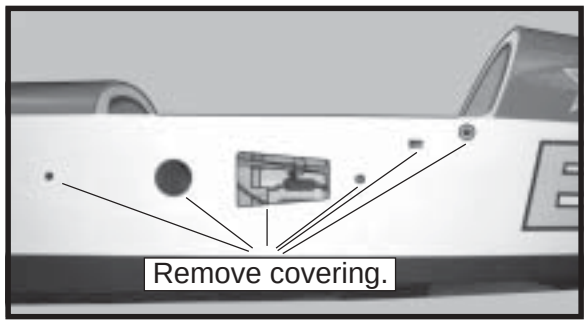

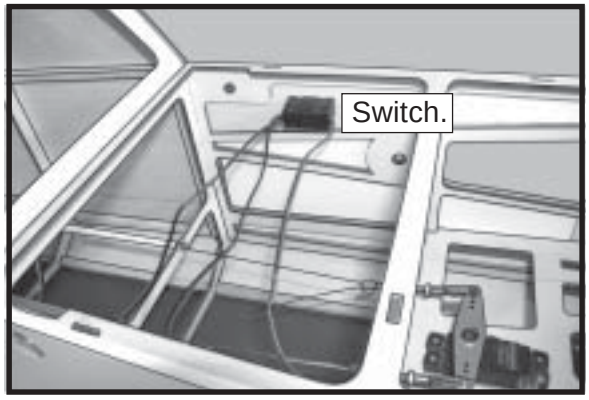

INSTALLING HORIZONTAL FIN.

☐ 1) Remove the covering at the rear tail root of horizontal fin as picture shown below.

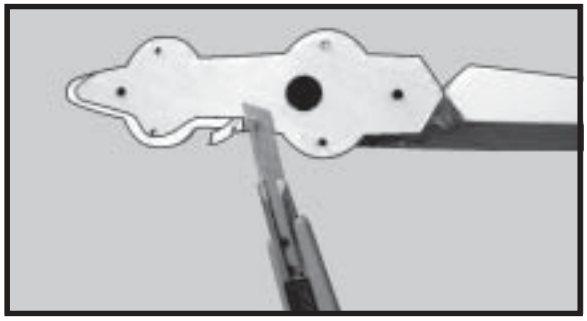

☐ 2)Sand the aluminium tube using sandpaper. This will improve the bond of the epoxy to the cardboard horizontal fin.

Coat both sides of one half of the aluminium tube with 30 minute epoxy. Next, pour some epoxy into the cardboard horizontal fin. Use enough epoxy to fill any gaps.

☐ 3) Insert aluminium tube into the cardboard of fuselage.

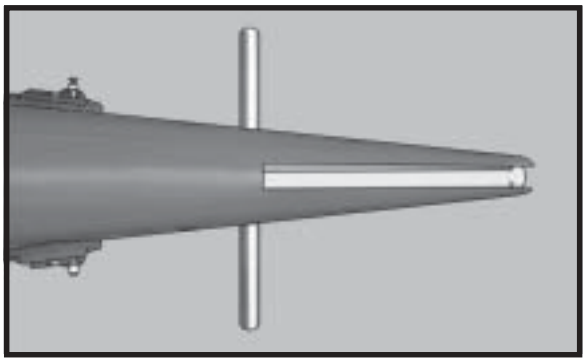

☐ 4) Slide the two horizontal fin halves together and carefully align them at the possition on the fuselage. Wipe away any excess epoxy using paper towels.

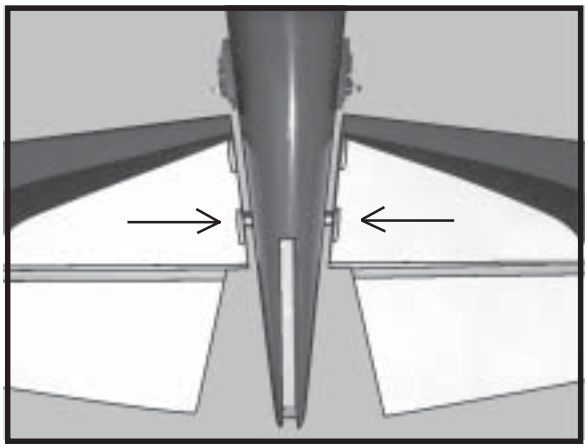

☐ 5) Bolt the horizontal fin to the fuselage using the 4 machine screws (3x10mm). Double cheek that all the screws are tight before proceeding.

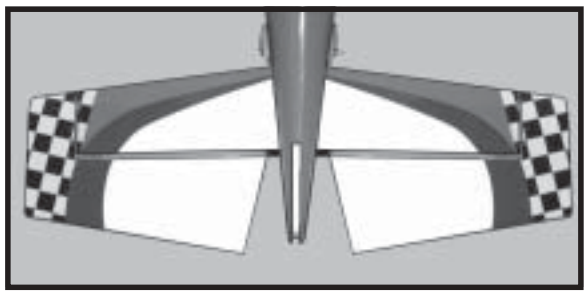

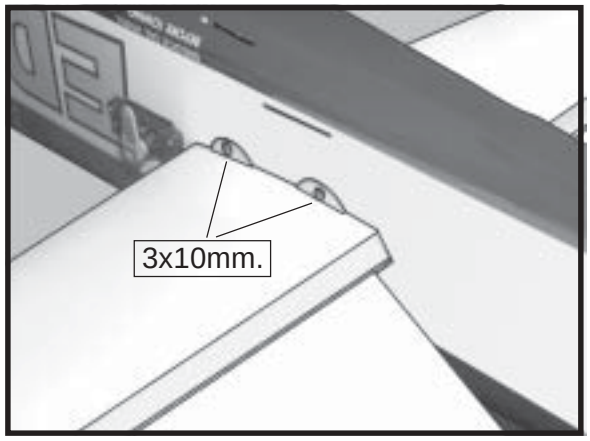

VERTICAL STABILIZER INSTALLATION.

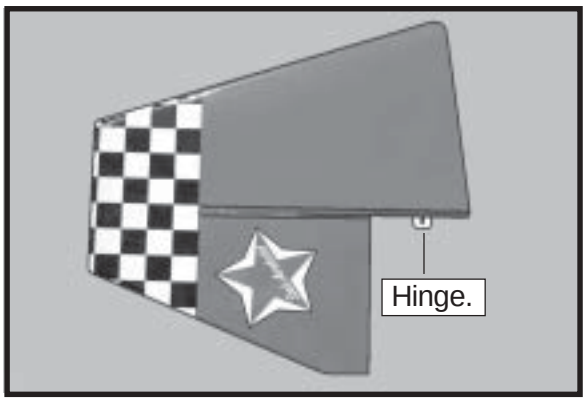

☐ 1) Using a modeling knife, remove the covering from over the precut hinge slot cut into the lower rear portion of the fuselage. This slot accepts the lower rudder hinge.

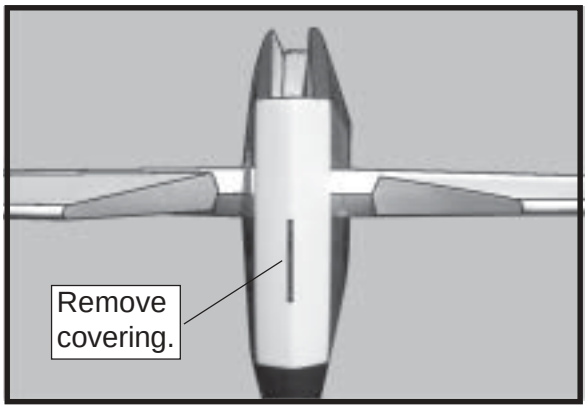

☐ 2) Slide the vertical stabilizer into the slot in the top of the fuselage. The rear edge of the stabilizer should be flush with the rear edge

of the fuselage and the lower rudder hinge should engage the precut hinge slot in the lower fuselage. The bottom edge of the stabilizer should also be firmly pushed against the top of the horizontal stabilizer.

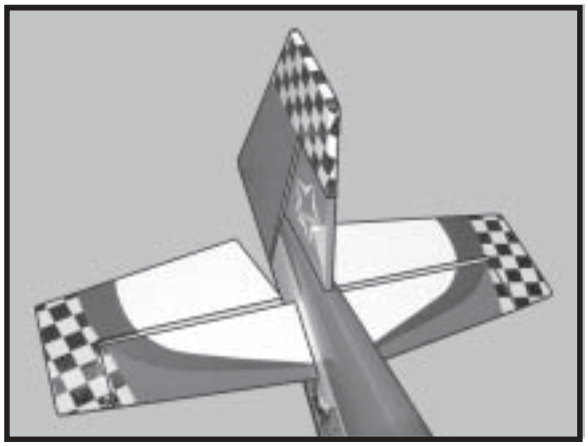

☐ 3) While holding the vertical stabilizer firmly in place, use a pen and draw a line on each side of the vertical stabilizer where it meets the top of the fuselage.

☐ 4) Remove the stabilizer. Using a modeling knife, remove the covering from below the lines you drew.

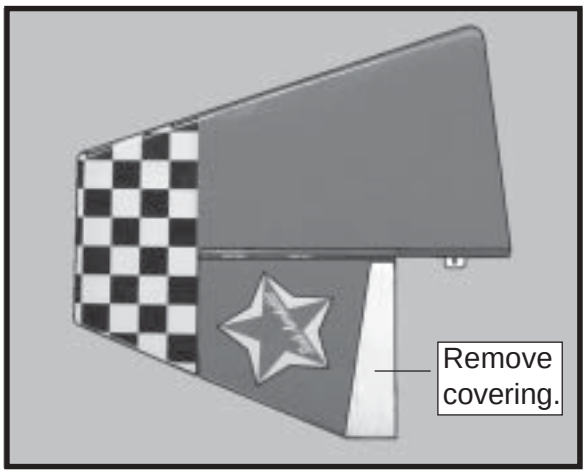

⚠ *When cutting through the covering to remove it, cut with only enough pressure to only cut through the covering itself. Cutting into the balsa structure may weaken it.*

☐ 5) Slide the vertical stabilizer back in place. Using a triangle, check to ensure that the vertical stabilizer is aligned 90º to the horizontal stabilizer.

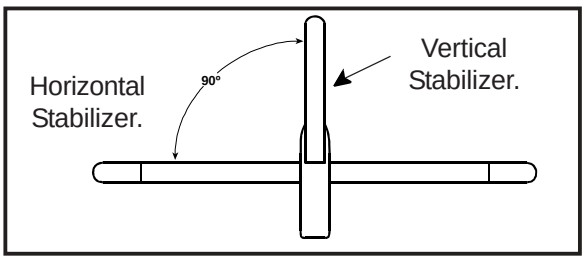

☐ 6) When you are sure that everything is aligned correctly, mix up a generous amount of 30 Minute Epoxy. Apply a thin layer to the mounting slot in the top of the fuselage and to the sides and bottom of the vertical stabilizer mounting area. Apply epoxy to the bottom and top edges of the filler block and to the lower hinge also. Set the stabilizer in place and realign. Double check all of your measurements once more before the epoxy cures. Hold the stabilizer in place with T-pins or masking tape and remove any excess epoxy using a paper towel and rubbing alcohol. Allow the epoxy to fully cure before proceeding.

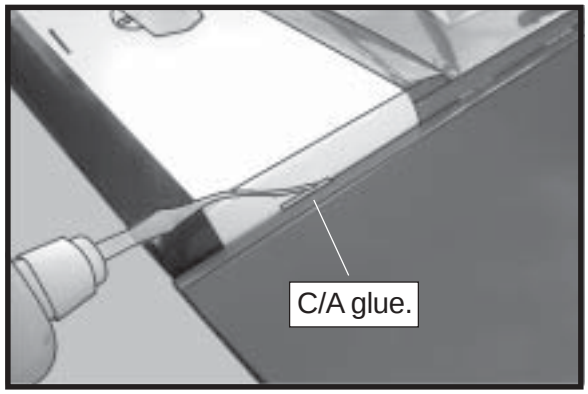

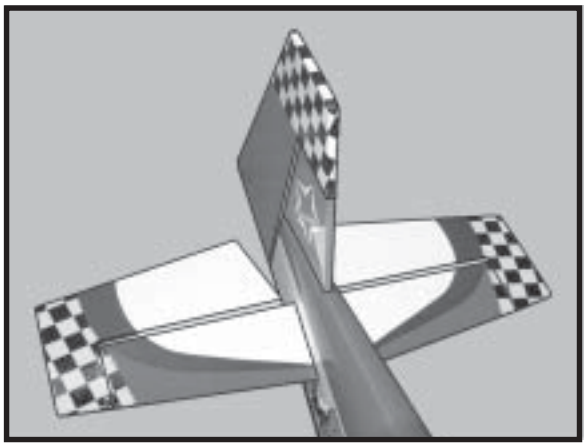

AILERON CONTROL HORN INSTALLATION.

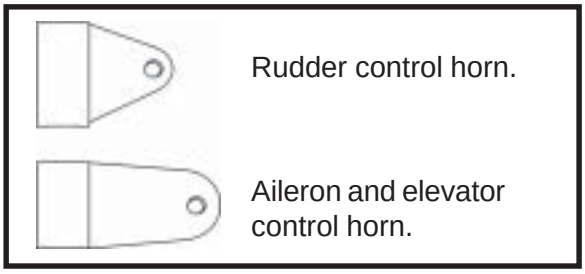

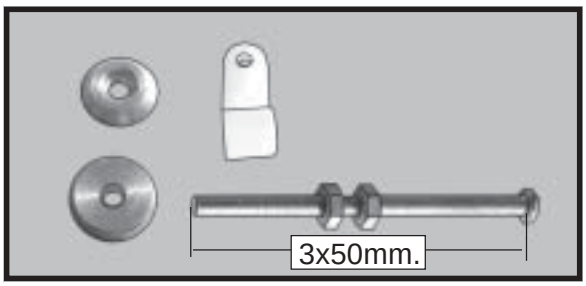

☐ 1) Aileron control horn:
Mix a small amount of 30 minute epoxy and lightly coat the inside of the hole in the aileron and the 3x50mm control horn screw.

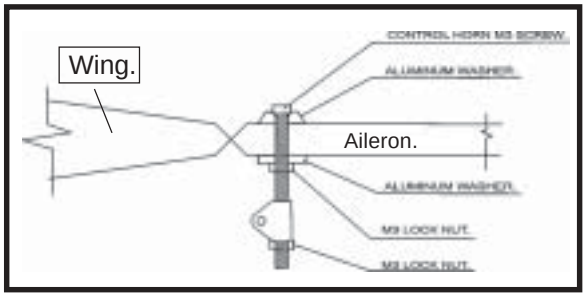

☐ 2) Thread the screw (insert the washer) into the hole from the top of surface. Wipe away any excess epoxy on the wing and screw with rubbing alcohol and a paper towel. Screw the M3 nut (insert the washer) in place as shown. Alllow the epoxy to fully cure.

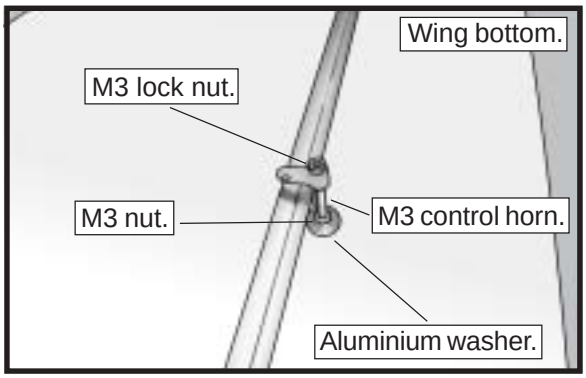

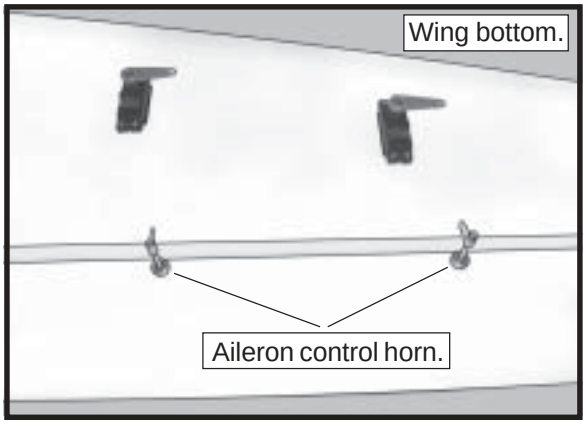

Repeat the procedure for orther wing.

ELEVATOR CONTROL HORN INSTALLATION.

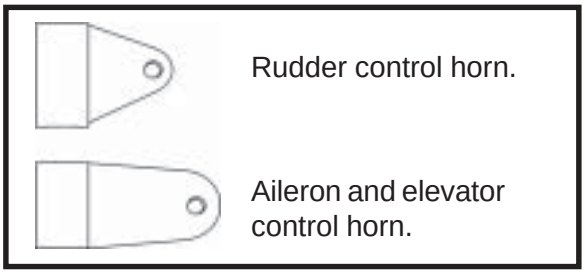

☐ 1) Elevator control horn:
Mix a small amount of 30 minute epoxy and lightly coat the inside of the hole in the elevator and the 3x50mm control horn screw.

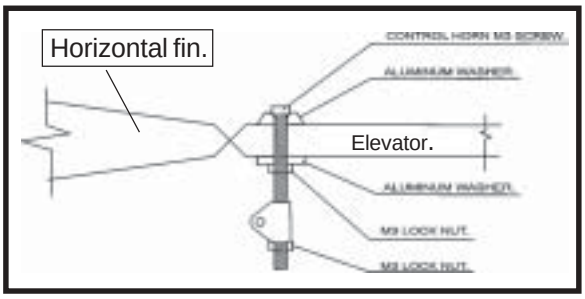

☐ 2) Thread the screw (insert the washer) into the hole from the top of surface. Wipe away any excess epoxy on the fin and screw with rubbing alcohol and a paper towel. Screw the M3 nut (insert the washer) in place as shown. Alllow the epoxy to fully cure.

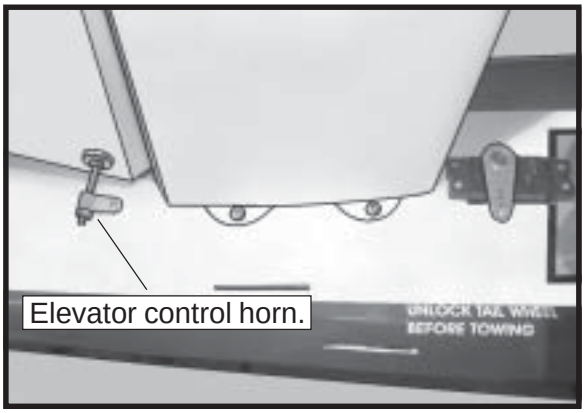

Repeat the procedure for orther elevator.

ELEVATOR PUSHROD INSTALLATION.

Elevator pushrods assembly follow pictures below.

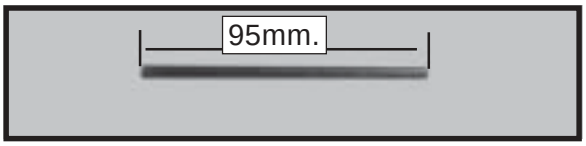

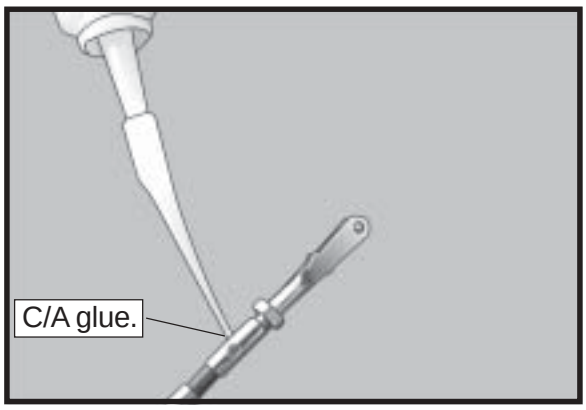

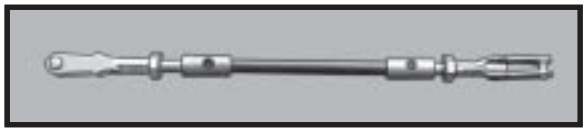

Center the servo using the radio system. Attach the servo arm to the servo using the screw provided with the servo.

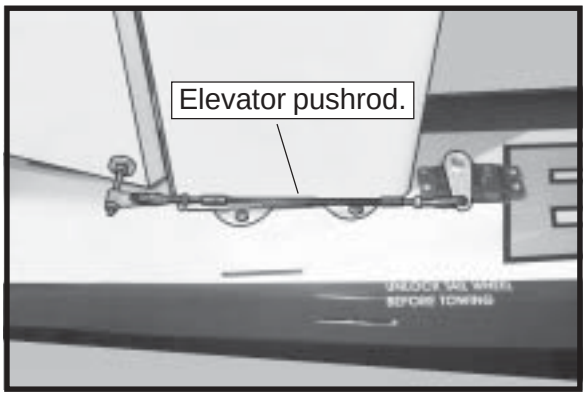

Repeat the procedure for orther elevator.

AILERON PUSHROD INSTALLATION.

Repeat the procedure for wing panel as same as elevator pushrod.

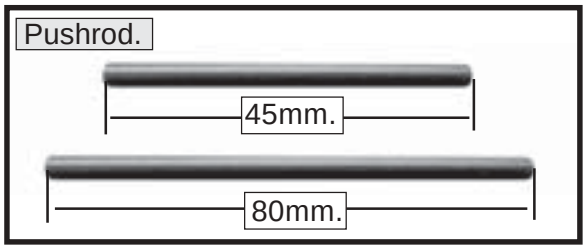

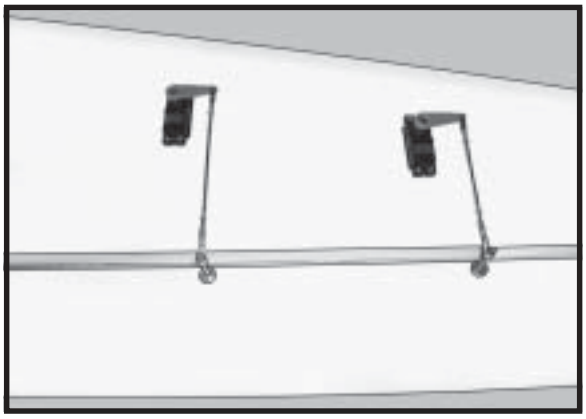

Repeat the procedure for orther aileron.

RUDDER CONTROL HORN INSTALLATION.

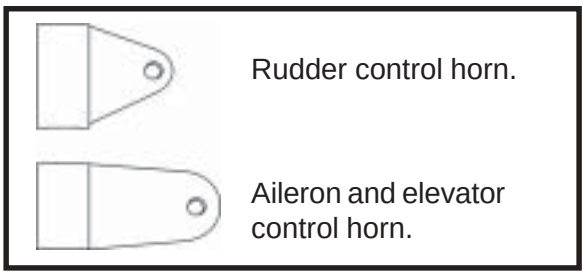

☐ 1) Position the rudder control horn on the left - right side of the rudder.

☐ 2) Locate the two nylon control horns, two nylon control horn backplates and three machine screws.

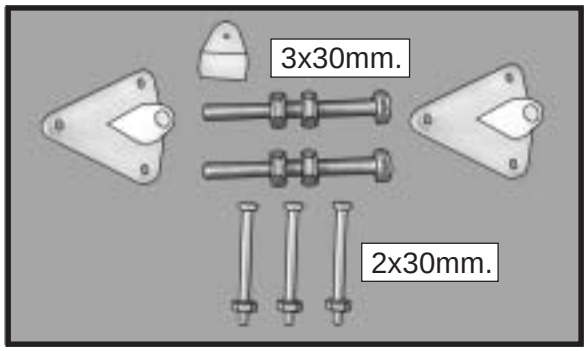

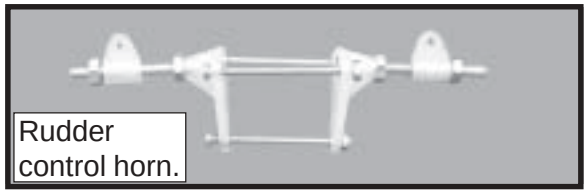

☐ 3) Position the rudder horn on the both side of rudder. The clevis attach- ment holes should be positioned over the hinge line.

☐ 4) Using a 1.5mm drill bit and the control horns as a guide, drill the mounting holes through the rudder halves.

☐ 5) Mount the control horns by inserting the bolts through the control horn bases and elevator halves, then into the mounting backplates. Do not overtighten the nuts or the backplates may crush the wood.

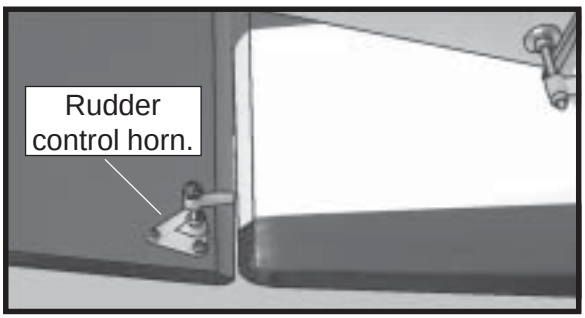

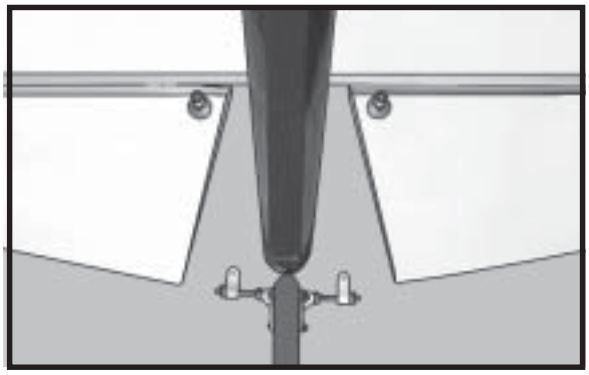

RUDDER PULL - PULL CABLE SYSTEM.

See pictures below:

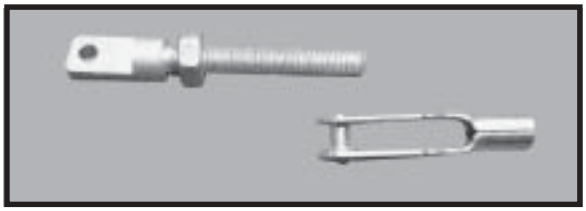

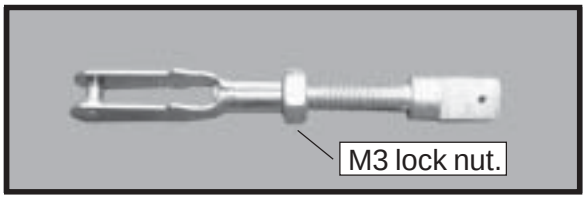

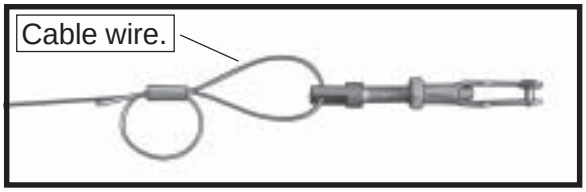

☐ 1) Insert servo arm into servo.

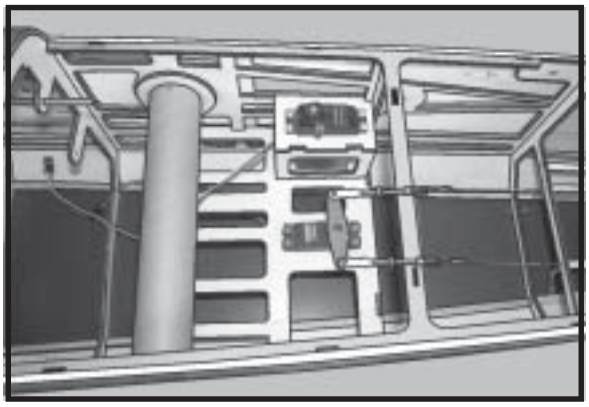

☐ 2) With the radio on, check the operation of the rudder. Adjust the cables so when the rudder servo is centered, the rudder is centered as well. There will be tension on the cables. Adjustments can be made at the rudder control horn and at the servo arm. Once adjustments are made, secure the servo arm to the rudder arm servo using the screw that came with the servo

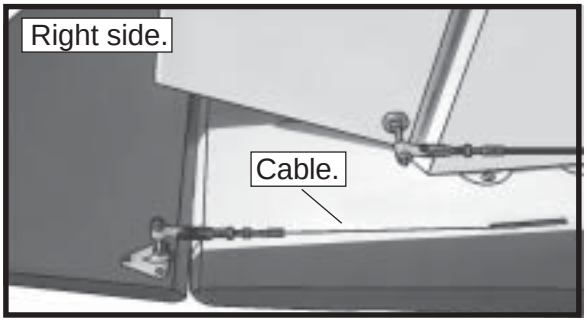

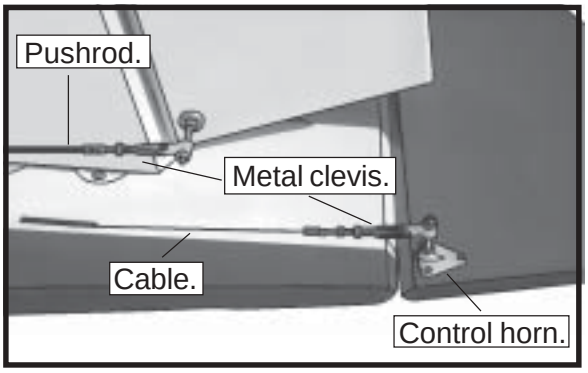

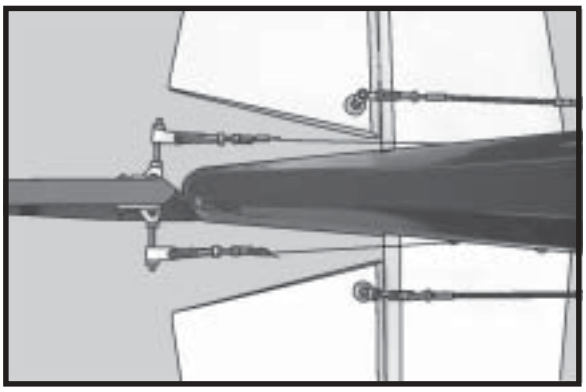

MOUNTING THE TAIL WHEEL.

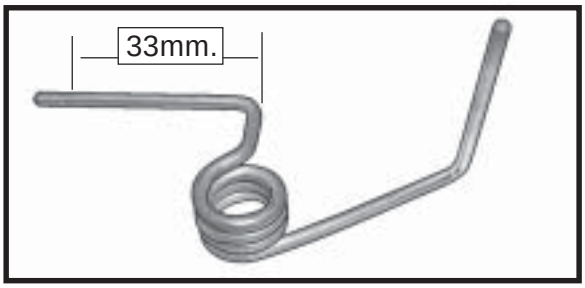

☐ 1) You have to trim each axles and using a tool cutting and cut-off wheel.

Caution when cutting the axles wear protective goggles.

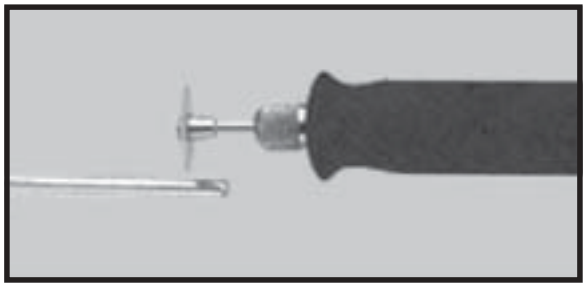

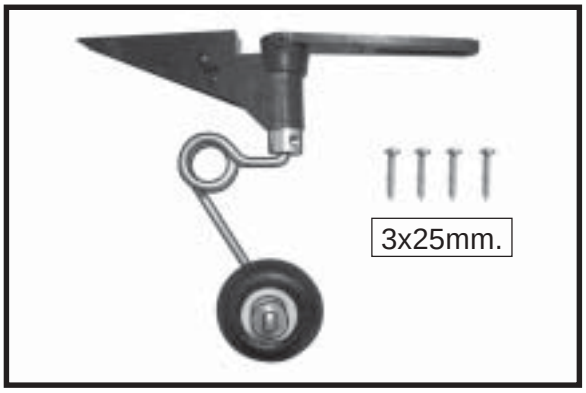

☐ 2) Set the tail wheel assembly in place. The pivot point of the tail wheel wire should be even with the rudder hinge line and the tail wheel bracket should be on the plywood plate.

☐ 3) Using a pen, mark the locations of the four mounting screws. Remove the tail wheel bracket and tiller and drill 1mm pilot holes at the locations marked.

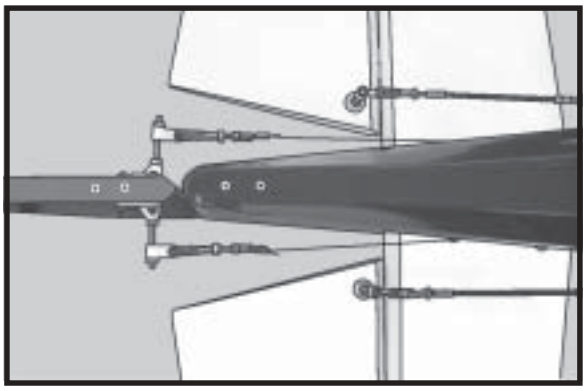

☐ 4) Secure the tail wheel bracket in place using two 3x25mm wood screws. Be careful not to overtighten the screws.

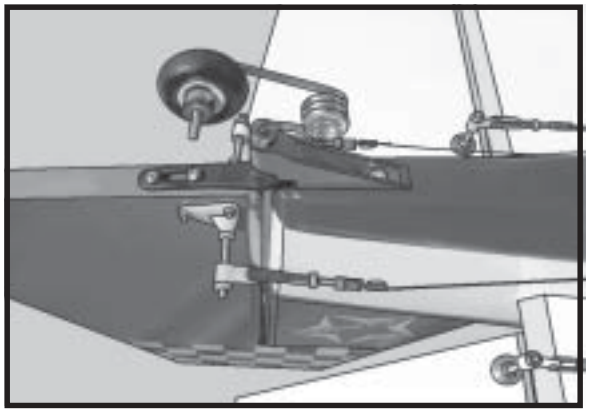

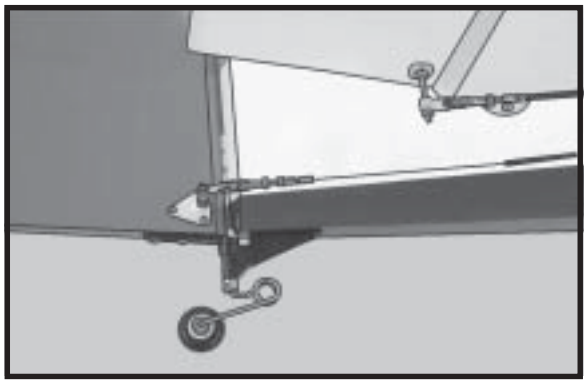

THROTTLE SERVO ARM INSTALLATION.

☐ 1) Install adjustable servo connector in the servo arm.

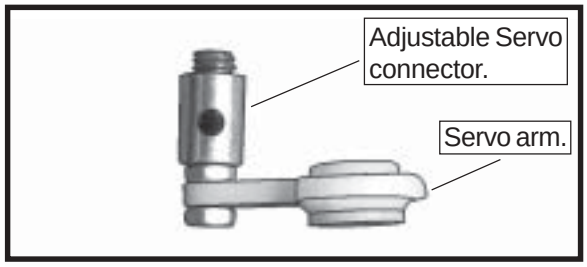

☐ 2) Install the rubber grommets and brass collets onto the throttle servo. Test fit the servo into the throttle servo mount.

Because the size of servos differ, you may need to adjust the size of the precut opening in the mount. The notch in the sides of the mount allow the servo lead to pass through.

☐ 3) Secure the servos with the screws provided with your radio system.

☐ 4) Install the pushrod throttle.

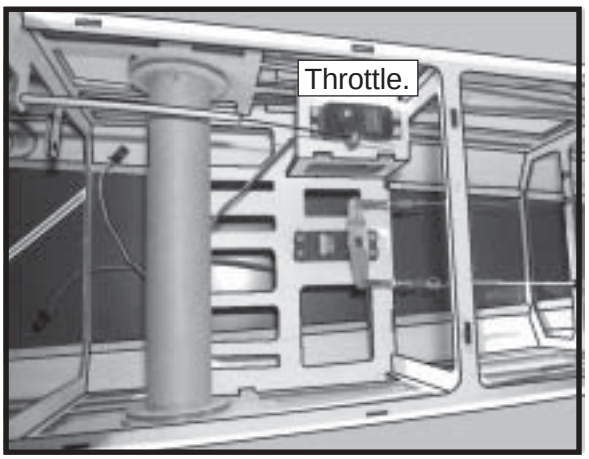

INSTALLING THE BATTERY-RECEIVER.

☐ 1) Plug the six servo leads and the switch lead into the receiver. Plug the battery pack lead into the switch also.

☐ 2) Wrap the receiver and battery pack in the protective foam rubber to protect them from vibration.

☐ 3) Route the antenna in the antenna tube inside the fuselage and secure it to the bottom of fuselage using a plastic tape. See picture below.

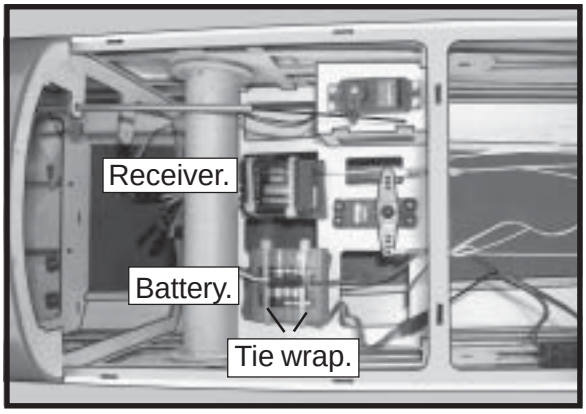

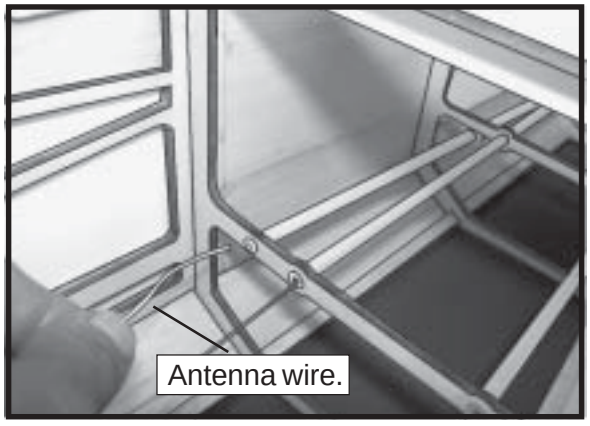

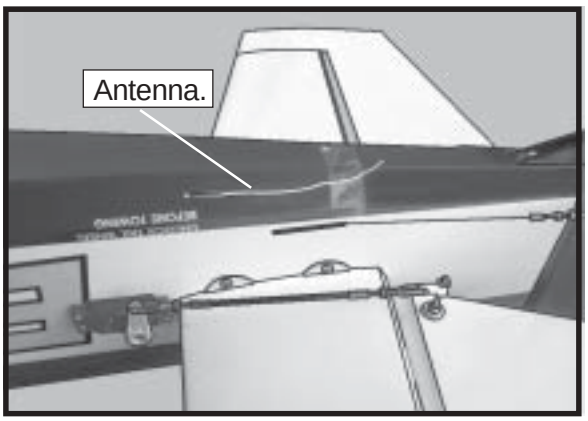

ATTACHMENT WING-FUSELAGE.

Attach the aluminium tube into fuselage.

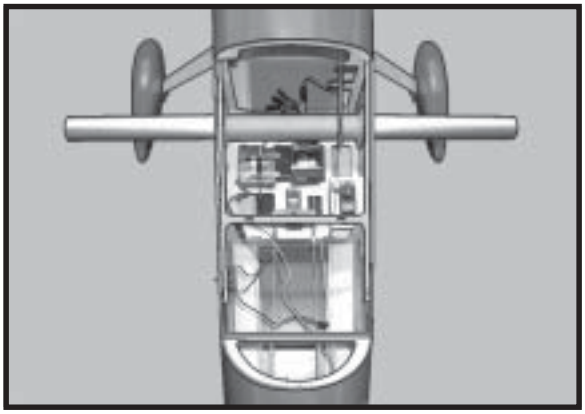

Insert two wing panels as pictures below:

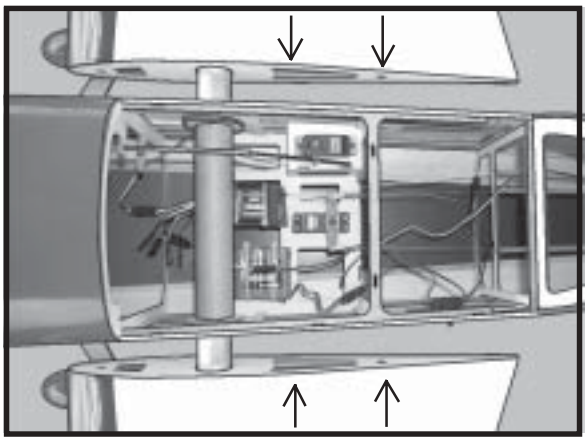

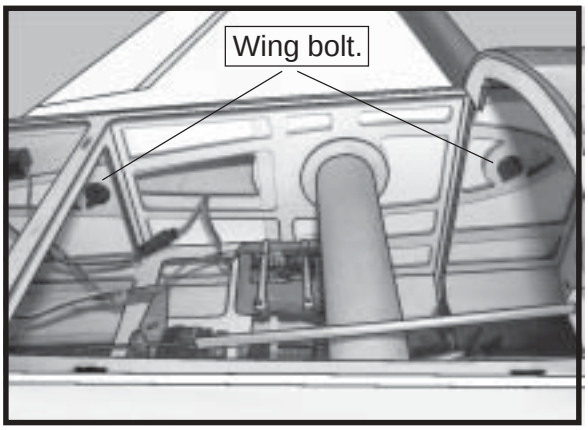

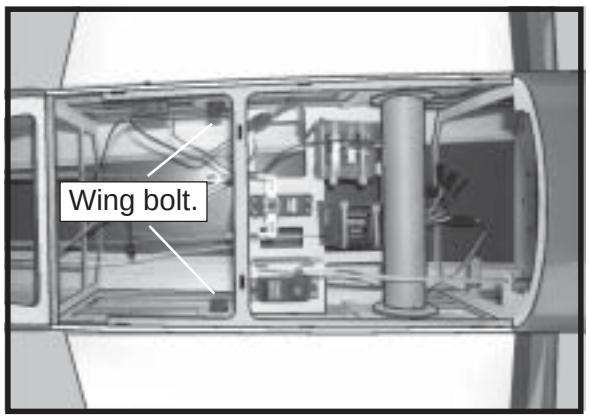

INSTALLING THE RECEIVER AND BATTERY.

☐ 1) Plug the servo leads and the switch lead into the receiver. Plug the battery pack lead into the switch also.

☐ 2 Wrap the receiver and battery pack in the protective foam rubber to protect them from vibration.

⚠ *When balancing the airplane you may need to move the battery or receiver forward or after to achieve proper balance.*

☐ 3) Using a 1/16" drill bit, drill a hole through the side of the fuselage, near the receiver, for the antenna to exit. Route the antenna out of the fuselage and secure it to the vertical stabilizer using a rubber band and a modified servo arm. See picture as below.

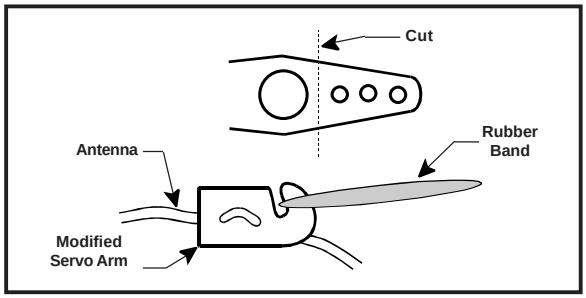

BALANCING.

It is critical that your airplane be balanced correctly. Improper balance will cause your plane to lose control and crash. The center of gravity is located ***95-110mm*** back from the leading edge of the wing, measured at the fuselage.

CONTROL THROWS.

☐1) We highly recommend setting up the **EDGE 540** using the control throws listed at right. We have listed control throws for both Low Rate (initial test flying/sport flying) and High Rate (aerobatic flying).

☐2) Turn on the radio system, and with the trim tabs on the transmitter in neutral, center the control surfaces by making adjustments to the clevises or adjustable servo connectors. The servo arms should be centered also.

☐ 3) When the elevator, rudder and aileron control surfaces are centered, use a ruler and check the amount of the control throw in each surface. **The control throws should be measured at the widest point of each surface!**

INITIAL FLYING/SPORT FLYING

Ailerons :	3/16" up 3/16" down
Elevator :	3/8" up 3/8" down
Rudder :	3/4 right 3/4 left

AEROBATIC FLYING

Ailerons :	3/8" up 3/8" down
Elevator :	7/8" up 7/8" down
Rudder :	1-1/4" right 1-1/4" left

Do not use the aerobatic settings for initial test flying or sport flying.

☐ 4) By moving the position of the adjustable control horn out from the control surface, you will decrease the amount of throw of that control surface. Moving the adjustable control horn toward the control surface will increase the amount of throw.

FLIGHT PREPARATION.

☐ A) Check the operation and direction of the elevator, rudder, ailerons and throttle.

☐ B) Plug in your radio system per the manufacturer's instructions and turn everything on.

☐ C) Check the elevator first. Pull back on the elevator stick. The elevator halves should move up. If it they do not, flip the servo reversing switch on your transmitter to change the direction.

☐ D) Check the rudder. Looking from behind the airplane, move the rudder stick to the right. The rudder should move to the right. If it does not, flip the servo reversing switch on your transmitter to change the direction.

☐ E) Check the throttle. Moving the throttle stick forward should open the carburetor barrel. If it does not, flip the servo reversing switch on your transmitter to change the direction.

☐ F) From behind the airplane, look at the aileron on the right wing half. Move the aileron stick to the right. The right aileron should move up and the other aileron should move down. If it does not, flip the servo reversing switch on your transmitter to change the direction.

PREFLIGHT CHECK.

☐1) Completely charge your transmitter and receiver batteries before your first day of flying.

☐2) Check every bolt and every glue joint in the **EDGE 540** to ensure that everything is tight and well bonded.

☐3) Double check the balance of the airplane. Do this with the fuel tank empty.

☐4) Check the control surfaces. All should move in the correct direction and not bind in any way.

☐5) If your radio transmitter is equipped with dual rate switches double check that they are on the low rate setting for your first few flights.

☐6) Check to ensure the control surfaces are moving the proper amount for both low and high rate settings.

☐7) Check the receiver antenna. It should be fully extended and not coiled up inside the fuselage.

☐8) Properly balance the propeller. An out of balance propeller will cause excessive vibration which could lead to engine and/or airframe failure.

We wish you many safe and enjoyable flights with your EDGE 540.